MAXNET® II

Platinum Series

Patented
U.S.# 7,142,414

3RU Active Chassis
(front view)

Passive Modules

MCX to F Transition Module

- High performance MCX and F connector

D3.1/CCAP™ Compliant

1.2 GHz

Specifications

MCX to F Transition Module	MPMF-3
MEASUREMENT	**5-1220 MHz**
INSERTION LOSS	< 0.2 dB
RETURN LOSS	> 25 dB
OPERATING TEMPERATURE	0°C to +50°C (+32°F to 122°F)
HUMIDITY	5-95% (without condensation)
DIMENSIONS	4.9"H x 0.69"W x 9.4"D (12.45H x 1.75W x 23.88D cm)
WEIGHT	0.88 lbs (0.4 kg)

Ordering Information

Part Number	Description
MPMF-3	Triple MCX-F Transmition Module

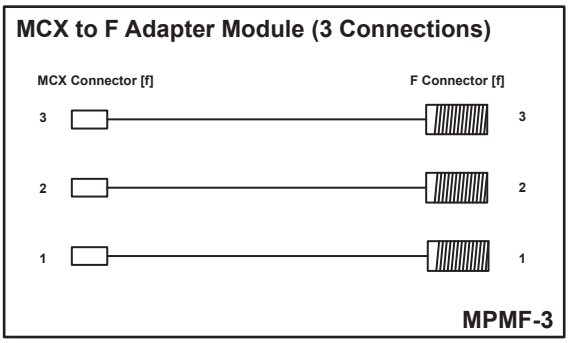

Functional Schematic

MAXNET® II is a registered trademark of ATX in the United States and/or other countries. Products or features contained herein may be covered by one or more U.S. or foreign patents. Other non-ATX product and company names mentioned in this data sheet are the property of their respective companies.

© 2019 by ATX Networks Corp. and its affiliates (collectively "ATX Networks Corp."). All rights reserved. This material may not be published, broadcast, rewritten, or redistributed. Information in this document is subject to change without notice.
Rev. 10/19 (ANW0630)

ISO 9001:15 REGISTERED

ATX Networks
Tel: 289.204.7800 | Toll-Free: 866.YOUR.ATX | support@atx.com